Type RC1 Load Cell

RC1称重传感器

IP 68

FM APPROVED

Important Features

- Capacities: 250 kN to 900 kN.
- High accuracy.
- Total stainless steel construction.
- Complete hermetic sealing.
- Protection IP 68.
- W&M certified for 3000 intervals. (NMi: TC2097 Rev. 4)
- Calibration in mV/V/Ω.
- Factory Mutual approved.

主要特点

- 量程：250kN~900kN
- 高精度
- 不锈钢结构
- 全金属焊接密封
- 防护等级（IP68）
- W&M认证，3000分度．(NMi: TC2097 Rev. 4)
- 数字标定，标定精度0.05%
- OIML、NTEP、CE、Ex、FM认证

Option

- Explosion protection zone 0, 1, 2 and 20, 21, 22 ATEX.

选项

- 可选防爆区域0，1，2和20，21，22ATEX

选型

RC1	-量程	-防爆（**EX**）

RC1 Specifications 技术参数

Maximum capacity 量程（Emax)	kN	250/400/600/900		
Metric equivalent (1 N=0.10197 kg) 公制	t	25.5/40.8/61.2/91.8		
Rated Output 输出灵敏度 （Cn）	mV/V	2 ± 0.1%		
Calibration in mV/V/Ω 数字标定精度	%Cn	⩽ ± 0.05 (⩽ ± 0.005)		
Accuracy class according to OIML R 60 精度等级		(GP)	C1	C3
Maximum number of verification intervals 最大检定分度数 (Nmax)		n.a.	1000	3000
Minimum load cell verification interval 最小检定分度 (Vmin)		n.a.	Emax/4667	Emax/10000
Combined error 综合误差	%Cn	⩽ ± 0.040	⩽ ± 0.030	⩽ ± 0.020
Creep error (30 minutes)/DR 蠕变	%Cn	⩽ ± 0.060	⩽ ± 0.049	⩽ ± 0.016
Temperature effect on minimum dead load output 零点温度系数	%Cn/℃	⩽ ± 0.0040	⩽ ± 0.0028	⩽ ± 0.0012
Temperature effect on sensitivity 灵敏度温度系数	%/℃	⩽ ± 0.0020	⩽ ± 0.0016	⩽ ± 0.0011
Excitation voltage 激励电压	V	5…15		

Zero balance 零点平衡	%Cn	⩽ ± 5
Input resistance 输入电阻	Ω	400 ± 15
Output resistance 输出电阻	Ω	351 ± 1
Insulation resistance 绝缘电阻	MΩ	⩾ 5000
Compensated temperature range 补偿温度范围	℃	-10…+40
Operating temperature range 工作温度范围	℃	-40…+80
Safe load limit 安全载荷限制	%Emax	200
Ultimate load 极限载荷	%Emax	300
Load cell material 材料		stainless steel 17-4 PH (1.4548) 不锈钢
Sealing 密封		complete hermetic sealing; 全金属焊接密封
Protection according DIN 40.050 防护等级		IP 68

Dimensions 尺寸

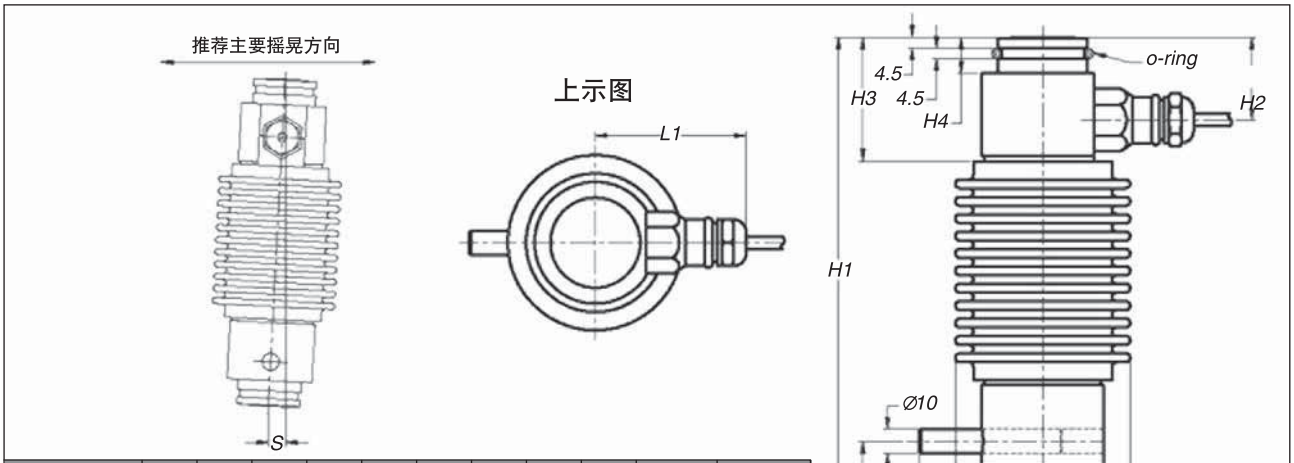

Type 型号	L1	L2	H1	H2	H3	H4	D1	D2	D3	Smax*	RF**
RC1-250 kN	62	33	192	34	51	15	72	50	37	10.5	19kN
RC1-400 kN	69	26	225	36	57	16	85	64	37	11	20kN
RC1-600 kN	69	26	225	36	57	16	85	64	54.4	12.5	63kN
RC1-900 kN	69	26	225	36	57	16	85	64	54.4	9	94kN

*** Smax=maximum lateral displacement of load introduction. Recommended gap 3...5 mm.**
*** Smax=最大侧向偏移量。推荐为3…5mm**
**** RF =restoring force at Smax and Emax.**
**** RF=在Smax和Emax之间的复位力。**
All dimensions in mm. 所有尺寸单位为mm.

接线图

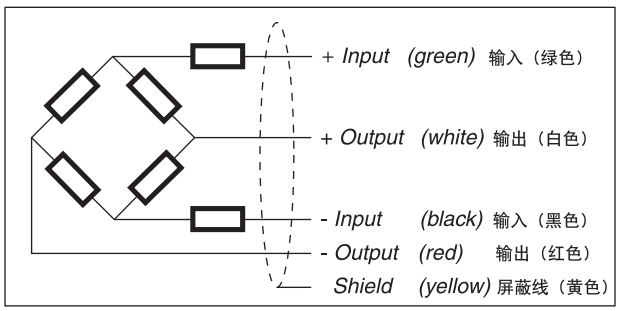

Wiring

- The load cell is provided with a shielded,
- conductor cable (AWG 20). Cable jacket polyurethane.
- Cable length: 12 m for RC1-250 kN, 16 m for RC1-400 kN, 18 m for RC1-600 and 900 kN.
- Cable diameter: 7.8 mm.
- The shield is floating (On request the shield can be connected to the load cell body).

连线

- 称重传感器带屏蔽线，4线制电缆（AWG 20）。
- 电缆长度：RC1-250 kN为12m、RC1-400 kN为16m、RC1-600和900 kN为18m。
- 电缆直径为：7.8 mm
- 屏蔽线悬浮（如果需要，屏蔽线可与称重传感器本体相连）