Type SB5 Load Cell

SB5悬梁臂式称重传感器

Important Features

- Capacities: 5 kN to 100 kN
- High accuracy.
- Stainless steel construction.
- Protection IP 67.
- Low profile.
- High input resistance: 1100Ω.
- W&M certified for 3000 intervals(PTB: D09-97.03).
- Unique "blind" loading hole.
- Calibration in mV/V/Ω.
- Fully compatible with load cell type SB4.
- Factory Mutual approved.

主要特点

- 量程: 5kN到100kN
- 高精度
- 不锈钢结构
- 防护等级 IP67
- 较低外形
- 输入电阻高：1100Ω，替换方便。
- W&M认证，3000分度。(PTB: D09-97.03).
- 盲孔安装
- 数字标定，标定精度0.05%
- 与型号SB4完全兼容
- FM、OIML、NTEP、CE、FM、Ex认证

Option

- Explosion protection zone 0, 1, 2 and 20, 21, 22ATEX.

选项

- 防爆保护区域0，1，2和20，21，22ATEX

选型

SB5	-量程	-防爆（EX）

SB5 Specifications 技术参数

Maximum capacity 量程 (Emax)	kN	5/10/20/50/100		5/10/20/50
Metric equivalent (IN=0.10197 kg)公制	kg	510/1020/2039/ 5099/10197		510/1020/ 2039/5099
Rated Output 输出灵敏度 (Cn)	mV/V	2 ± 0.1%		
Calibration in mV/V/Ω 数字标定精度	%Cn	⩽ ± 0.05 (⩽ ± 0.005)		
Accuracy class according to OIML R 60 精度等级		(GP)	C1	C3
Maximum number of verification intervals 最大检定分度数(Nmax)		n.a.	1000	3000
Minimum load cell verification interval 最小检定分度 (Vmin)		n.a.	Emax/5100	Emax/10200
Combined error 综合误差	%Cn	⩽ ± 0.040	⩽ ± 0.030	⩽ ± 0.020
Creep error (30 minutes)/DR 蠕变（30分钟）	%Cn	⩽ ± 0.060	⩽ ± 0.049	⩽ ± 0.016

Temperature effect on minimum dead load output 零点温度系数	%Cn/℃	⩽ ± 0.0040	⩽ ± 0.0028	⩽ ± 0.012
Temperature effect on sensitivity 灵敏度温度系数	%/℃	⩽ ± 0.0020	⩽ ± 0.0016	⩽ ± 0.0011
Excitation voltage 激励电压	V	5…15		
Zero balance 零点平衡	%Cn	⩽ ± 5		
Input resistance 输入电阻	Ω	1100 ± 50		
Output resistance 输出电阻	Ω	1000 ± 2		
Insulation resistance 绝缘电阻 (100 V DC)	MΩ	⩾ 5000		
Compensated temperature range 补偿温度范围	℃	-10…+40		
Operating temperature range 工作温度范围	℃	-20…+65		
Safe load limit 安全载荷限制 (Elim)	%Emax	200		
Ultimate load 极限载荷	%Emax	300		
Safe side load 安全侧载	%Emax	100		
Load cell material 材料		stainless steel 17-4 PH (1.4548) 不锈钢		
Sealing 密封		Potted 胶封		
Protection according DIN 40.050 防护等级		IP 67		

Dimensions 尺寸

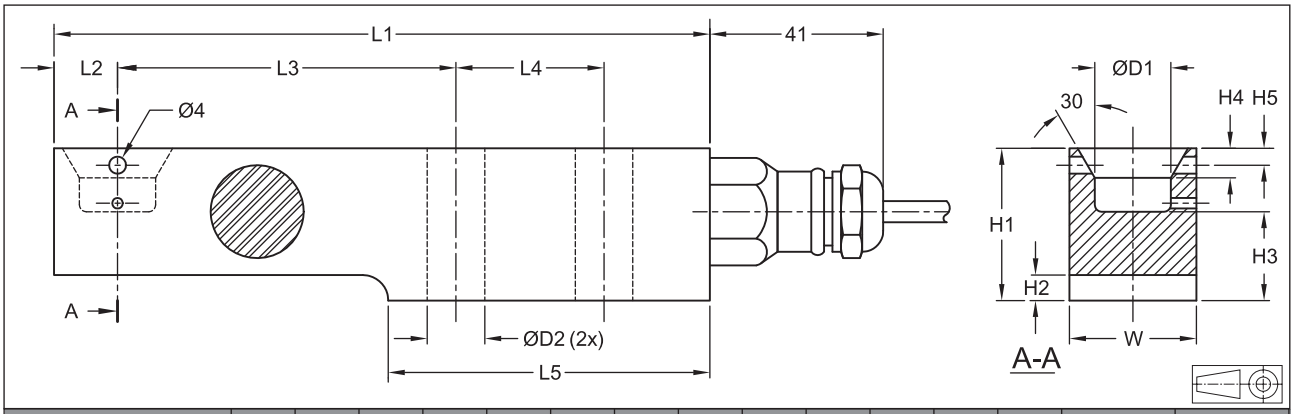

型号	L1	L2	L3	L4	L5	H1	H2	H3	H4	H5	W	D1	D2	装配螺栓	力矩
SB5-5 kN/10 kN/20 kN	155	15	80	35	76	36	6	21	7	4	30	18	13	M12 8.8	90 Nm
SB5-50 kN	190	21	105	40	93	49	8	28.5	6	8	43	25	21	M20 8.8	400 Nm
SB5-100 kN	245	30	135	50	120	73	12.5	42	10	n.a.	60	30	27	M24 8.8	700 Nm

All dimensions in mm. 所有尺寸单位为**mm.**
*** Torque values assume oiled threads.** 力矩值适用在油螺纹下。

接线图

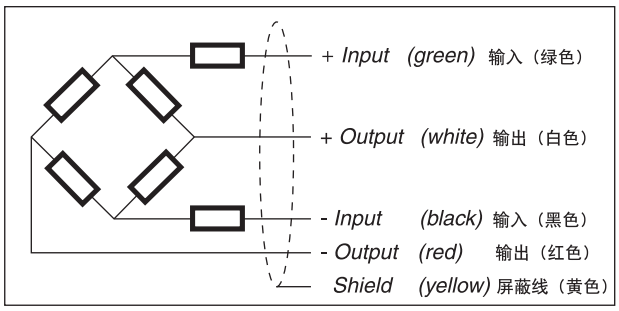

Wiring

- The load cell is provided with a shielded, 4 conductor cable (AWG 24). Cable jacket polyurethane.
- Cable length: 3 m for SB5-5 kN/10 kN/20 kN, 4.5 m for SB5-50 kN/100 kN.
- Cable diameter: 5 mm.
- The shield is floating (On request the shield can be connected to the load cell body).

连线

- 称重传感器专用4芯屏蔽电缆线（AWG 24）
- 电缆长度：对于SB5-5 kN/10 kN/20 kN 为3m.对于SB5-50 kN／100 kN为4.5m.
- 电缆直径为：5 mm
- 屏蔽线悬浮（如果要求，屏蔽可与称重传感器本体相连）